FIRST ANGLE PROJECTION (ALL DIMENSIONS IN MILLIMETRES)

DRAWING No. 2-80-655-15981

05-228/C

CAUTION THE INFORMATION ON THIS DOCUMENT IS THE PROPERTY OF BHARAT HEAVY ELECTRICALS LTD. IT MUST NOT BE USED DIRECTLY OR INDIRECTLY IN ANY WAY DETRIMENTAL TO THE INTEREST OF THE COMPANY.

NOTES: ALL DIMENSIONS ARE IN MILLIMETRES

1. DESIGN PRESSURE – 0.2 KG/CM2 (G) DESIGN TEMPERATURE: 440°C
2. FOR STANDARD NOTES OF PRODUCTION AND ERECTION OF PIPES AND TOLERANCE ON FITTINGS REFER DRG NO. 4-80-001-37654 & 4-80-301-26192
3. FOLLOW APPLICABLE QP AND PAINTING SCHEDULE FOR THE PROJECT
4. ALL UNMARKED BENDS/ELBOWS ARE 90 DEG
5. PIPE ENDS SHALL BE BEVELLED AS PER B16.25 FIG.2 TYPE-A
6. GASKET IS SUPPLIED VIDE 7419-80-733 PGMA.
7. FOR ELECTRODE DATA REFER

PIPE SIZE	MATERIAL SPEC	EP FIG	WELD SPEC	ELECTRODE DATA	
				ROOT RUN	FILLER RUN
OD1020x8	ASTMA516 GR.70	FIG-A	8 V	ER70S-2/ E6010/E6013	ER70S-2/ E7016/E7018

8. THREADS SHALL BE UNIFIED(UNC FOR UPTO 1" DIA) AS PER ASME B1.1 WITH CLASS 2A FIT FOR STUDS AND CLASS 2B FIT FOR NUTS.
9. 01 O INDICATES WELD AT SHOP.
10. 01 X INDICATES WELD AT SITE.

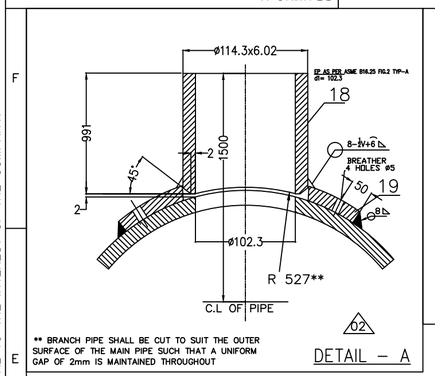

** BRANCH PIPE SHALL BE CUT TO SUIT THE OUTER SURFACE OF THE MAIN PIPE SUCH THAT A UNIFORM GAP OF 2mm IS MAINTAINED THROUGHOUT

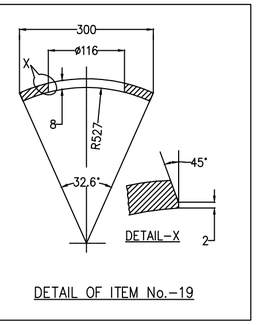

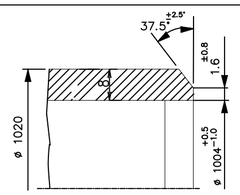

FIG-A

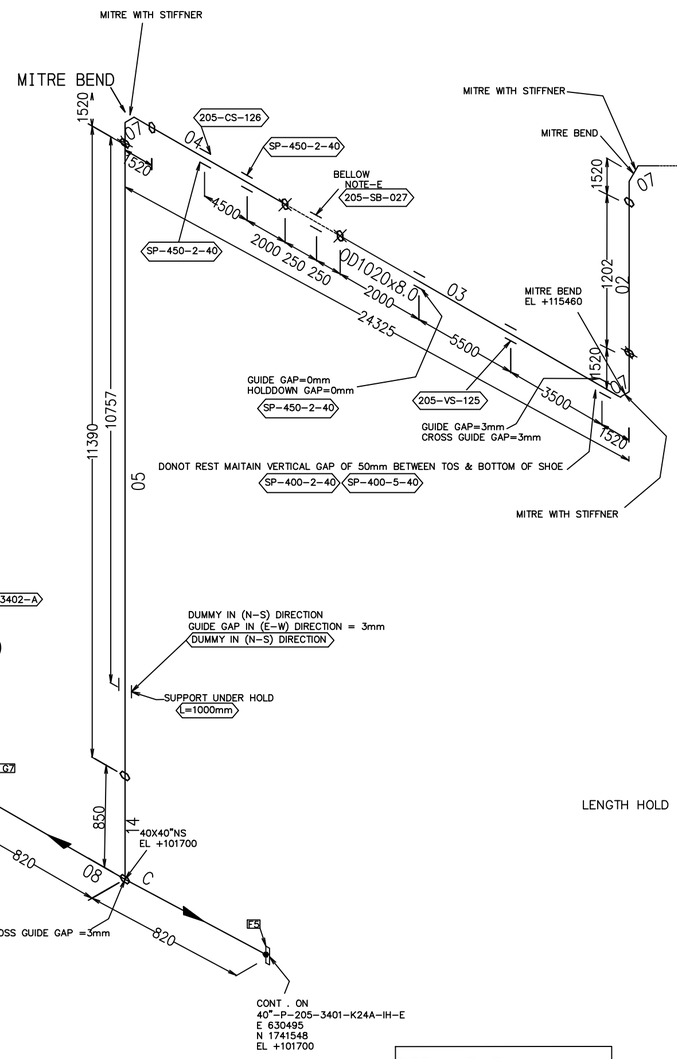

LENGTH HOLD

ITEM CODE	ITEM NO.	DESCRIPTION	DRAWING NO.	ITEM NO. / VAR	MATERIAL CODE / MATERIAL SPEC.	A / C	UNIT WT. / QTY.
---	19	PAD PLATE 8mm;	2-80-655-15981		---- / ASTM A 516 Gr.70	C	4|959 / 1
----	18	PIPE OD114.3x6.02 L=991	2-80-655-15981		/ SA 106 GR.B	C	15|922 / 01
PI21977Z00410ZZZZ	17	PIPE NB15 L=2000	2-80-655-15981		15 182 002 0000 / SA 106 GR.B	C	3|895 / 03
WK602D3Z004ZZZZZZ	16	SW STUB NB15 CL:6000	4-80-655-83151		153392800000 / SA 105	C	0|210 / 03
P18Y613Z03263ZZZZ	15	P.F PIPE OD1020x8 L=847	3-80-655-35455	14	/ ASTM A 516 GR.70	C	169|115 / 1
P18Y613Z03263ZZZZ	14	P.F PIPE OD1020x8 L=750	3-80-655-35455	12	/ ASTM A 516 GR.70	C	149|747 / 1
FBF6321Z032ZZZZZZ	13	BLIND FLANGE. CL.150 FF/125AARH 40"	2-80-655-16009	08	159421130100 / ASTM A 516 GR.70	C	80|737 / 1
GKFDR22Z03202ZZZZ	12	GASKET JOB STD EXPANDED PTFE CORD 150# 7MM THK – 40"	2-80-655-15981		---- / ----		--|-- / 2
---	11	NUT 5/8" UNC	2-80-655-15981		---- / A194 GR.2H		0|033 / 192
---	10	STUD 5/8" UNC	2-80-655-15981		---- / A193 GR.B7		0|224 / 96
FNF6321Z032ZZZZZZ	09	FLANGE.SO CL.150 FF/125AARH 40"	2-80-655-16008	08	150230560000 / ASTM A 516 GR.70	C	38|306 / 4
P18Y613Z03263ZZZZ	08	P.F PIPE OD1020x8 L=1640	3-80-655-35455	08	/ ASTM A 516 GR.70	C	327|514 / 1
WDMBY41Z0326305ZZ	07	P.F MITRE BEND OD1020X8	2-80-655-16010	07	/ ASTM A 516 GR.70	C	487|616 / 3
P18Y613Z03263ZZZZ	06	P.F PIPE OD1020x8 L=1944	3-80-655-35455	13	/ ASTM A 516 GR.70	C	388|149 / 1
P18Y613Z03263ZZZZ	05	P.F PIPE OD1020x8 L=11390	3-80-655-35455	09	/ ASTM A 516 GR.70	C	2274|377 / 1
P18Y613Z03263ZZZZ	04	P.F PIPE OD1020x8 L=9785	3-80-655-35455	21	/ ASTM A 516 GR.70	C	1953|710 / 1
P18Y613Z03263ZZZZ	03	P.F PIPE OD1020x8 L=11000	3-80-655-35455	07	/ ASTM A 516 GR.70	C	2196|744 / 1
P18Y613Z03263ZZZZ	02	P.F PIPE OD1020x8 L=1202	3-80-655-35455	06	/ ASTM A 516 GR.70	C	243|144 / 1
P18Y613Z03263ZZZZ	01	P.F PIPE OD1020x8 L=1585	3-80-655-35455	05	/ ASTM A 516 GR.70	C	320|525 / 1

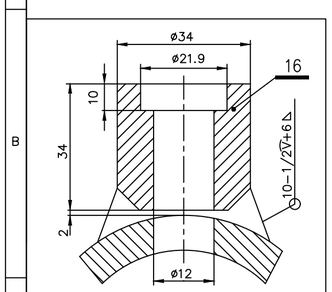

DETAIL-1

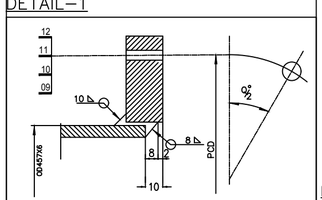

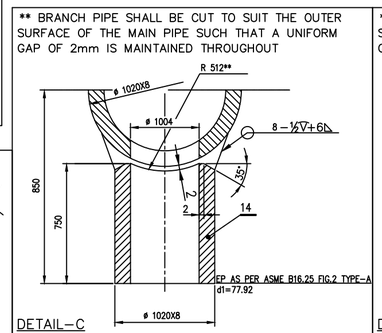

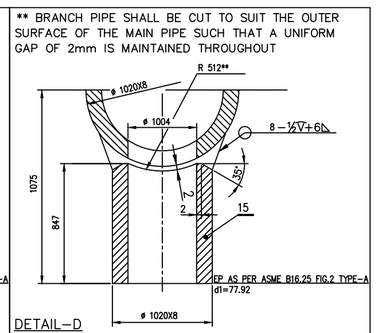

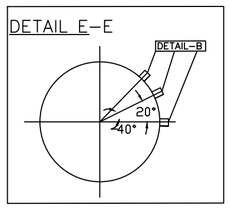

REV	DATE	ALTERED / APPROVED	
01	29.04.19	M.P.K / TRINADH	

ZONE: DRAWING REVISED AS PER MAIL FROM EIL DT: 24.04.19

REVISION MARKED AS 01

N

CUSTOMER: INDIAN OIL CORPORATION LIMITED (HALDIA)

CONSULTANT: ENGINEERS INDIA LIMITED (EIL) NEW DELHI

NAME OF PROJECT: BS-VI, HALDIA

BHEL CUSTOMER NO: 7419

BHARAT HEAVY ELECTRICALS LTD., PIPING CENTRE, CHENNAI 600 017

	NAME	SIGN	DATE	NO OF ITEMS
DRN	E.PYRIA	–sd–	27.02.19	
CHD	SARAVANAN.C	–sd–	27.02.19	
APPD	KVR	–sd–	27.02.19	

DEPT. / CODE: C/M/F — GRADE OF UN TOL. DIM — SCALE — WEIGHT (Kg). — ITEM No.

TITLE: EIL DRAWING NO: 40-P-205-2204-K24A-IH-E

CARD CODE: U 01

DRAWING No.: 2-80-655-15981 (SH 1 OF 2)

REV: 01

SIZE A2

V: A2